LET	ALTERATIONS	DATE	BY	LET	ALTERATIONS	DATE	BY
				A	REVISED BM: NOTE ADDED REMOVED FAS OF DWG.	5-2-5	LMF

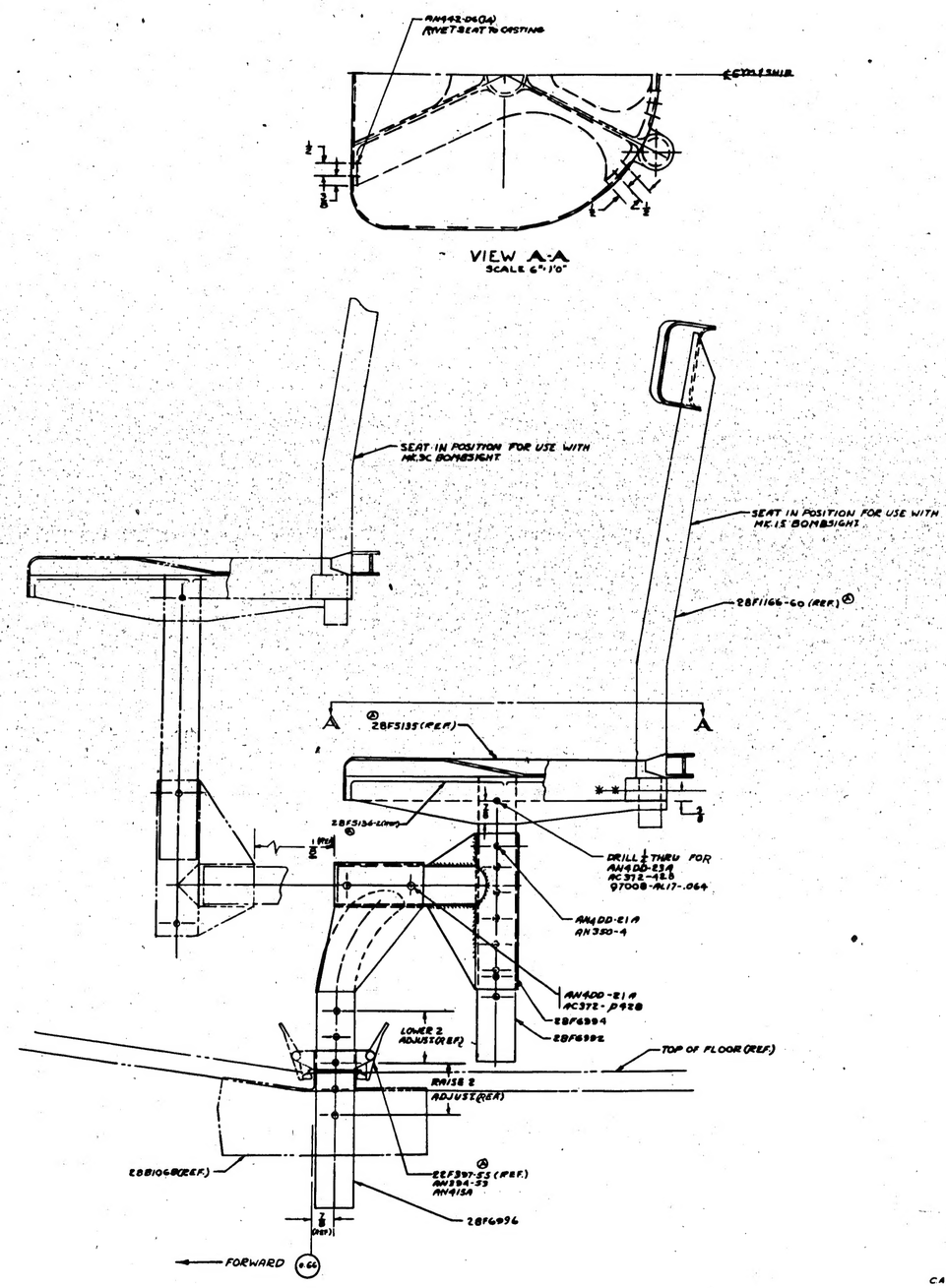

C.A.C. CHG. 186-1

⊗ NOTE:
1- THESE PARTS ARE ON BM OF 28F6135 & REUSED PER THIS DWG. - MCR. 186-1
2- ASSEMBLE 28F6186 CASTING & 28F6992 WITH WET PRIME

PART No.	STOCK	MATERIAL	SPEC.	LT REQ -0	RH REQ -2	LT REQ -3	RH REQ -4	LT REQ -5	RH REQ -6
⊗ SEE NOTE #1									
22F137-5S									
22F378A-2									
28AC 8108									
28F1166-60									
AN442-04									
AN350-4				1					
AN400-21A					2				
⊗									
⊗									
AN400-21A				1					
AC372-4RB					2				
97008-AK17-.064					1				
⊗									
28F6994				1					
28F6992				1					
⊗									
⊗									
28F5134					1				
⊗									
-4									

PARTS LIST PER ASSY.

PART I	28F6993	1	
REQUIREMENTS PER ASSY.			
REPLACED	27F7	Stock No.	
REPLACED BY		Job No.	
LIST OF REQUIRED VALVE Drawing Numbers	Scale 6"=1'-0"		
1 PER			

A.C. — NAVY ADOPT — NONE — MODEL 1 LOCH — HEAT TREAT — FINISH — DRAFT — CHECK — MAT. — APPROV. — ENG.

NAME SEAT ASSY- BOMBER'S ADJUST.

CONSOLIDATED AIRCRAFT CORP. San Diego Calif.

DFP NAME — SIZE J — CODE — 28F6993

H 406

R